LIST NO. F236

ELECTRIC TOOL PARTS LIST

■ DISC GRINDER

2015· 6 · 3

Model G 12STA

(E1)

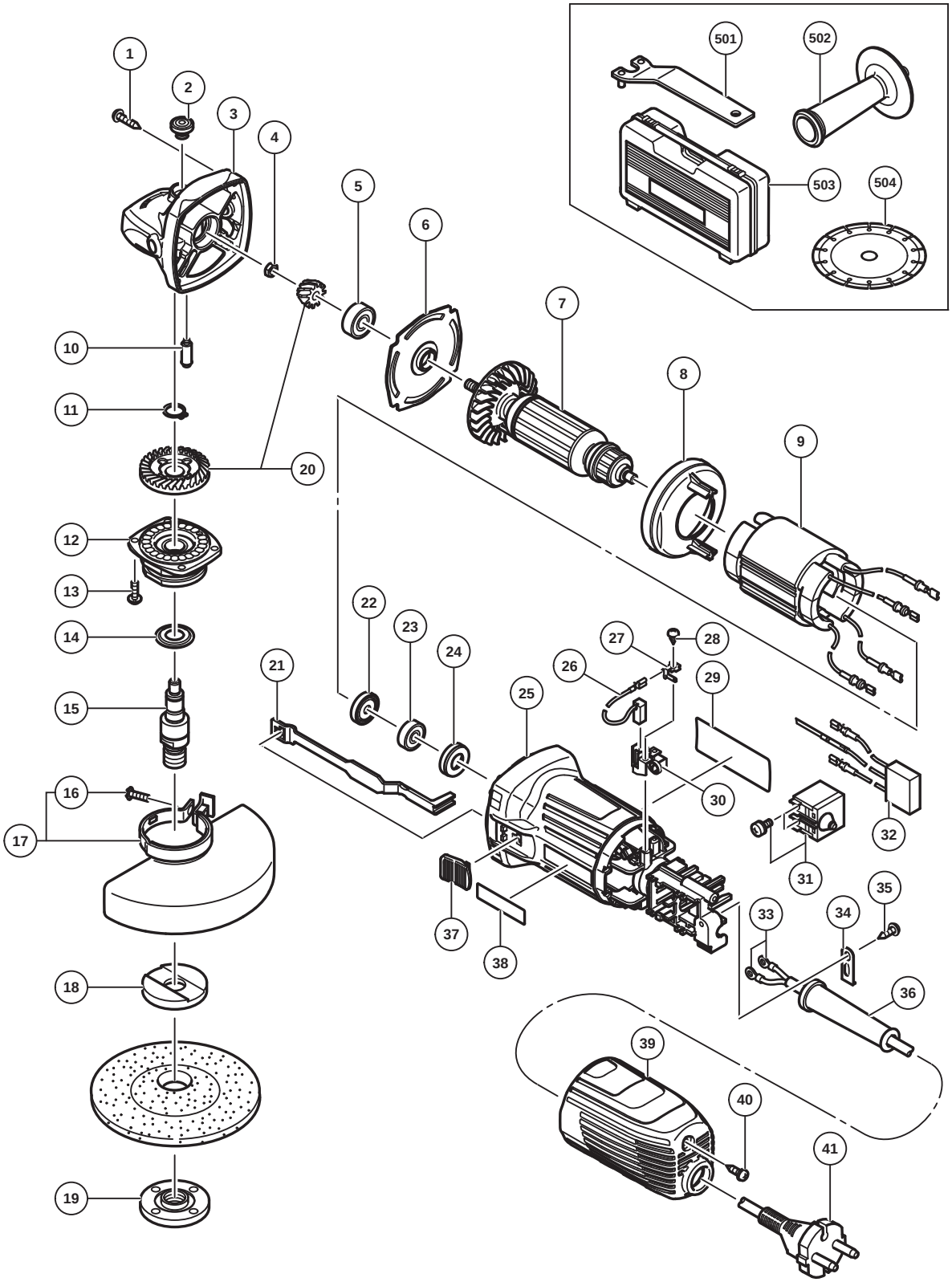

ITEM NO.	CODE NO.	DESCRIPTION	NO. USED	REMARKS	
1	328643	TAPPING SCREW (W/FLANGE) D4 X 23 (BLACK)	4		
2	301944	PUSHING BUTTON	1		
3	339146	GEAR COVER ASS'Y	1	INCLUD.2,10	
4	309191	SPECIAL NUT M6	1		
5	338337	BALL BEARING 608S	1		
6	338850	BEARING HOLDER	1		
7	361007E	ARMATURE 230V-240V	1		
8	338853	FAN GUIDE	1		
9	340908E	STATOR 220V-230V	1		
10	301943	LOCK PIN	1		
11	316487	RETAINING RING FOR D11 SHAFT	1		
12	338849	PACKING GLAND	1		
13	328628	SEAL LOCK SCREW (W/WASHER) M4 X 12	4		
14	328185	WASHER (A)	1		
15	330700	SPINDLE	1		
16	308386	MACHINE SCREW (W/SP. WASHER) M5 X 16 (BLACK)	1		
17	338848	WHEEL GUARD ASS'Y	1	INCLUD.16	
18	937817Z	WHEEL WASHER	1		
19	337329	WHEEL NUT M14	1		
20	328178	GEAR AND PINION SET	1		
21	338855	SLIDE BAR	1		
22	321722	DUST SEAL	1		
23	339145	BALL BEARING 626ZZ	1		
24	309929	RUBBER BUSHING	1		
25	338851	HOUSING	1		
26	999067	CARBON BRUSH 6.5 X 7.5 X 14 (1 PAIR)	2		
27	339185	TAB TERMINAL	2		
28	328210	TAPPING SCREW D3 X 8	4		
29		NAME PLATE	1		
30	333844	BRUSH HOLDER	2		
31	339149	PUSHING BUTTON SWITCH	1		
32	339147	NOISE SUPPRESSOR 220V-240V	1		
33	980063	TERMINAL	2		
34	338334	CORD CLIP	1		
35	305720	TAPPING SCREW (W/FLANGE) D4 X 12	1		
36	953327	CORD ARMOR D8.8	1		
37	338854	SLIDE SWITCH KNOB	1		
38		HITACHI LABEL	1		
39	338852	TAIL COVER	1		
40	305812	TAPPING SCREW (W/FLANGE) D4 X 16 (BLACK)	1		
41	500409Z	CORD	1	(CORD ARMOR D8.8)	

STANDARD ACCESSORIES

G 12STA

ITEM NO.	CODE NO.	DESCRIPTION	NO. USED	REMARKS	
501	938332Z	WRENCH	1		
502	302142	SIDE HANDLE	1		
503	339264	CASE	1		
504		DIAMOND CUTTER 115MM-D22.2 HOLE	1	SUPPLIED WITH ITEM NO.601	

OPTIONAL ACCESSORIES

ITEM NO.	CODE NO.	DESCRIPTION	NO. USED	REMARKS	
601	994314	DIAMOND WHEEL (SEGMENT) 115MM-D22.2	1		
602	316821	D. C. WHEELS 115MM A36Q (25 PCS.)	1		
603	937826Z	WASHER NUT	1		
604	937825Z	RUBBER PAD	1		
605	314095	SANDING DISCS 115MM C-P16 (10 PCS.)	1		
606	314096	SANDING DISCS 115MM C-P20 (10 PCS.)	1		
607	314097	SANDING DISCS 115MM C-P24 (10 PCS.)	1		
608	314098	SANDING DISCS 115MM C-P30 (10 PCS.)	1		
609	314099	SANDING DISCS 115MM C-P36 (10 PCS.)	1		
610	314100	SANDING DISCS 115MM C-P40 (10 PCS.)	1		
611	314101	SANDING DISCS 115MM C-P50 (10 PCS.)	1		
612	314102	SANDING DISCS 115MM C-P60 (10 PCS.)	1		
613	314103	SANDING DISCS 115MM C-P80 (10 PCS.)	1		
614	314104	SANDING DISCS 115MM C-P100 (10 PCS.)	1		
615	314105	SANDING DISCS 115MM C-P120 (10 PCS.)	1		
616	332785	WHEEL GUARD (FOR CUTTING)	1		

*ALTERNATIVE PARTS

Printed in Japan
(150603N)